MRK.	DATE	REVISION	SIGN
1			

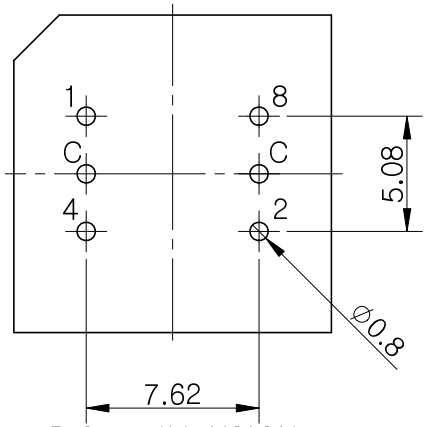

P.C.B DIMENSION

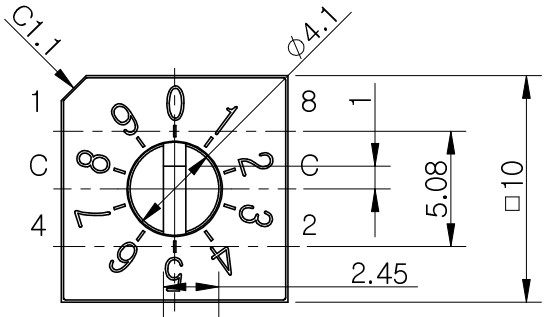

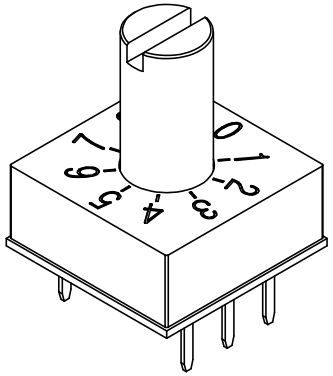

Specification
1. Rating : 25mA, 12V DC (Switching)
   25mA, 24V DC (None-Switching)
2. Contact Resistance : 100mΩ Max
3. Insulation Resistance : 100MΩ Min
4. Operating Force : 700gf Max
5. Life cycle : 10,000 steps

		Real Code				
		C	1	2	4	8
10 Position	0	●				
	1	●	●			
	2	●		●		
	3	●	●	●		
	4	●			●	
	5	●	●		●	
	6	●		●	●	
	7	●	●	●	●	
	8	●				●
	9	●	●			●
16 Position	A	●		●		●
	B	●	●	●		●
	C	●			●	●
	D	●	●		●	●
	E	●		●	●	●
	F	●	●	●	●	●

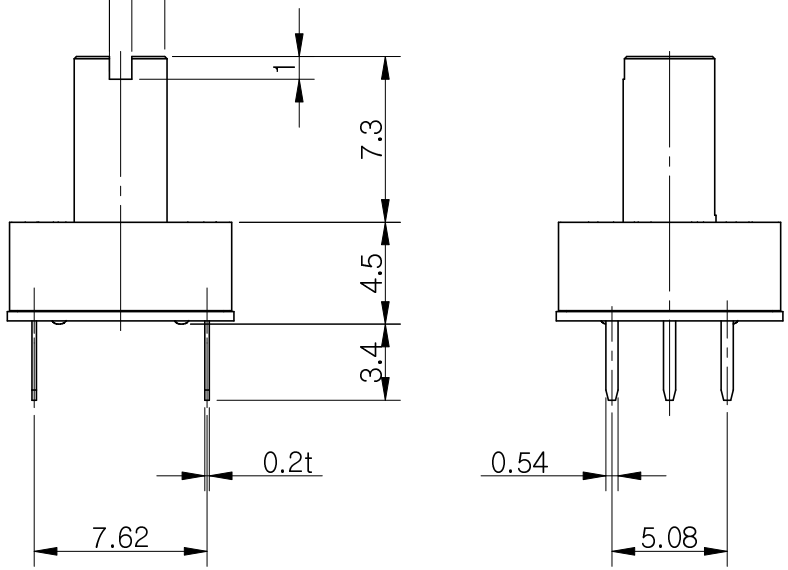

STANDARD LAYOUT

NO.	DESCRIPTION	MATERIAL	COLOR/FINISH	Q.TY	VENDOR
01	UDR Series	재질 <지정안함>		1	-

DRAW/DESIGNED	CHECKED	APPROVED	G.TOL	TITLE	UDR Series	
			±0.1			
			UNIT / SCALE	MODEL	USR-10	SHEET
2018-07-02			mm / 3:1			
SUNGMUN ELECTRONICS CO.,LTD			SIZE A4	DRAW NO.	U0SR-1000-01	1/1

본 도면은 당사 재산으로서, 허가없이 무단복사/배포 금지함. PROPERTY OF ISSUING ENTITY. CANNOT BE DISTRIBUTED OR REPRODUCED WITHOUT AUTHORIZATION. **SME 151028**