SERIES 900 SWITCHES

DETECTOR SWITCHES - SUB-MINIATURE SMT

SPECIFICATIONS

Contact Rating:	100mA @ 50 VDC
Life Expectancy:	50,000 cycles typical
Contact Resistance:	80mΩ max. typical @ 2-4 VDC 100mA
Insulation Resistance:	100MΩ min.
Dielectric Strength:	>1,000 Vrms at sea level
Actuation Force:	50 gf max.
Operating Temperature:	-25°C to +85°C
Travel:	2.0

MATERIALS

Housing:	4/6 Nylon
Actuator:	6T Nylon
Cover:	Stainless steel
Contacts:	Silver plated phosphor bronze
Terminals:	Silver plated brass
Spring:	Stainless steel

FEATURES & BENEFITS

- Right angle SMT detector switch
- Tape & reel packaging

APPLICATIONS/MARKETS

- Telecommunications
- Networking
- Computers/servers
- Performance audio
- Instrumentation
- Low power on/off designs
- External hard drives and modems

HOW TO ORDER

SERIES	MOUNTING	CIRCUIT	CONTACT MATERIAL
900	■	■	■
	A = None B = Mounting Tabs	G = Normally Open	Q = Silver

Example Ordering Number

900–A–G–Q

Specifications subject to change without notice.

900 AGQ

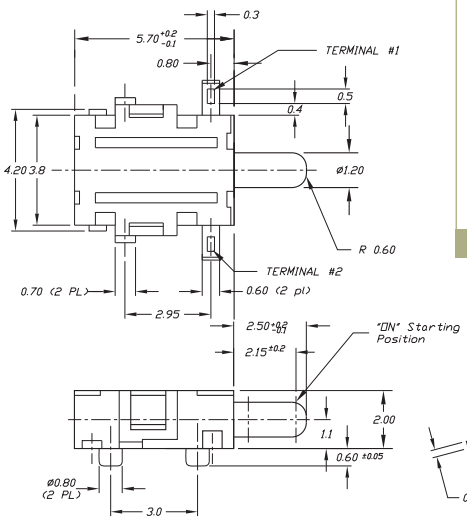

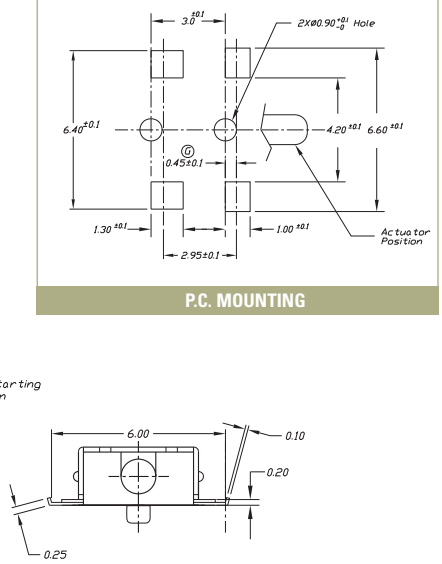

P.C. MOUNTING

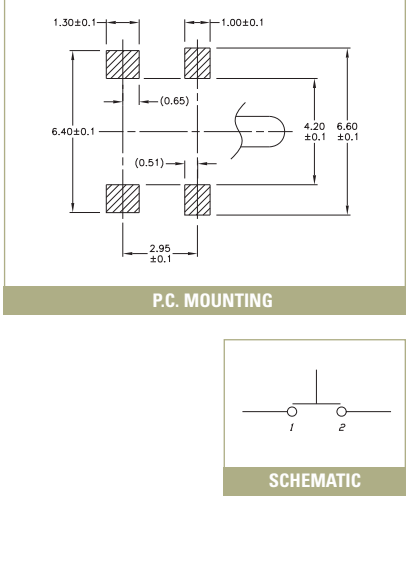

P.C. MOUNTING

SCHEMATIC